PORTWEST

SIZE CHART

STYLE NO:	S160	DESCRIPTION:	Hi Vis Lite Traffic Jacket

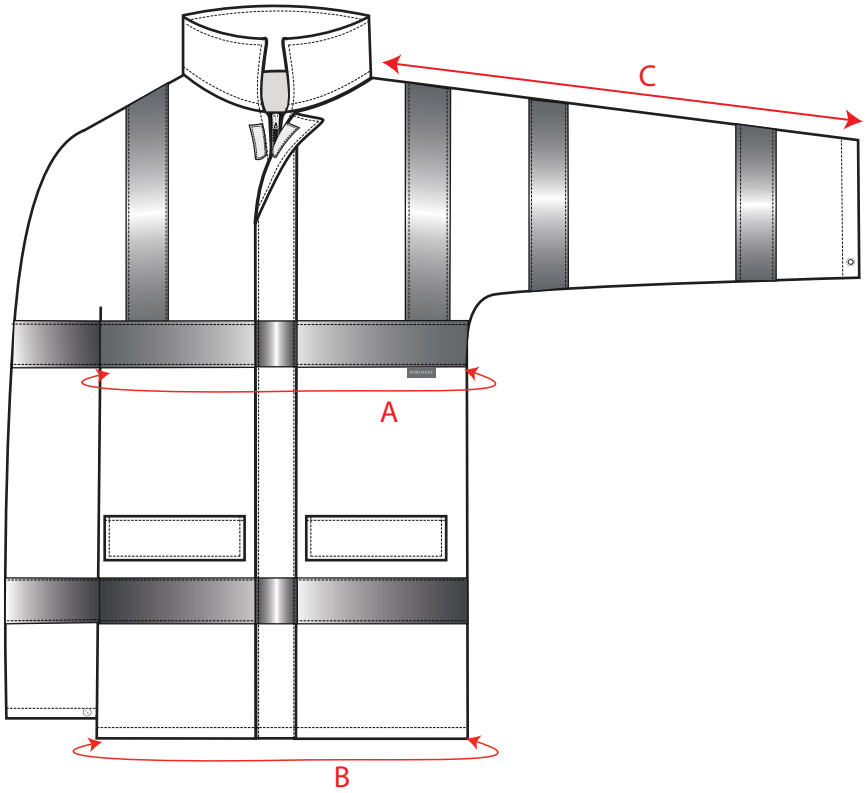

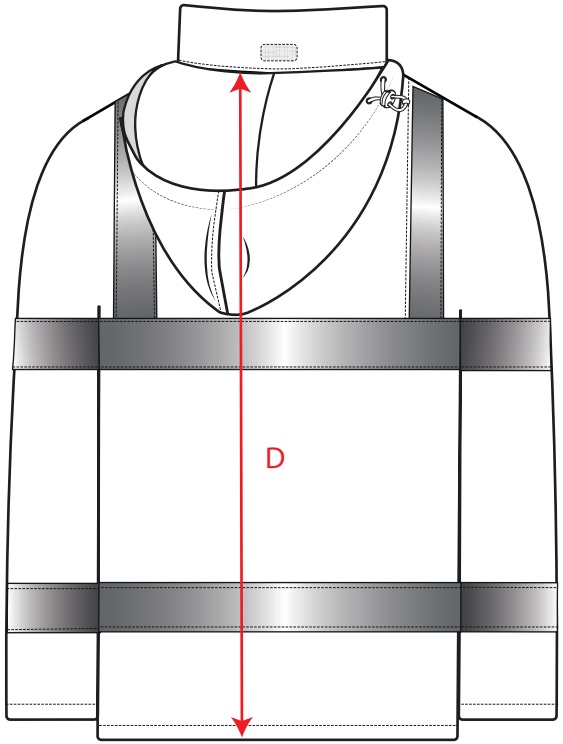

		Measurements												
														TOL
To Fit Chest		**XS**	**S**	**M**	**L**	**XL**	**XXL**	**3XL**	**4XL**	**5XL**	**6XL**	**7XI**	**8XL**	
		80-88	92-96	100-104	108-112	116-124	128-132	136-140	144-148	152-160	164-172			
Jacket Chest	**A**	102	110	118	126	134	142	150	158	170	182	194	206	1.5
Hem	**B**	102	110	118	126	134	142	150	158	170	182	194	206	1.5
Collar to Cuff	**C**	76.5	77.5	78.5	79.5	80.5	81.5	82.5	83.5	84.5	85.5	86.5	87.5	1
Centre Back to Hem	**D**	81	82	83	84	85	86	87	88	89	90	91	92	1

PORTWEST

© COPYRIGHT AND PROTECTED: **PORTWEST**
WESTPORT BUSINESS AND TECHNOLOGY PARK, WESTPORT, CO MAYO, IRELAND